Current part is item (38) on diagram. Available at www.oshkoshequipment.com

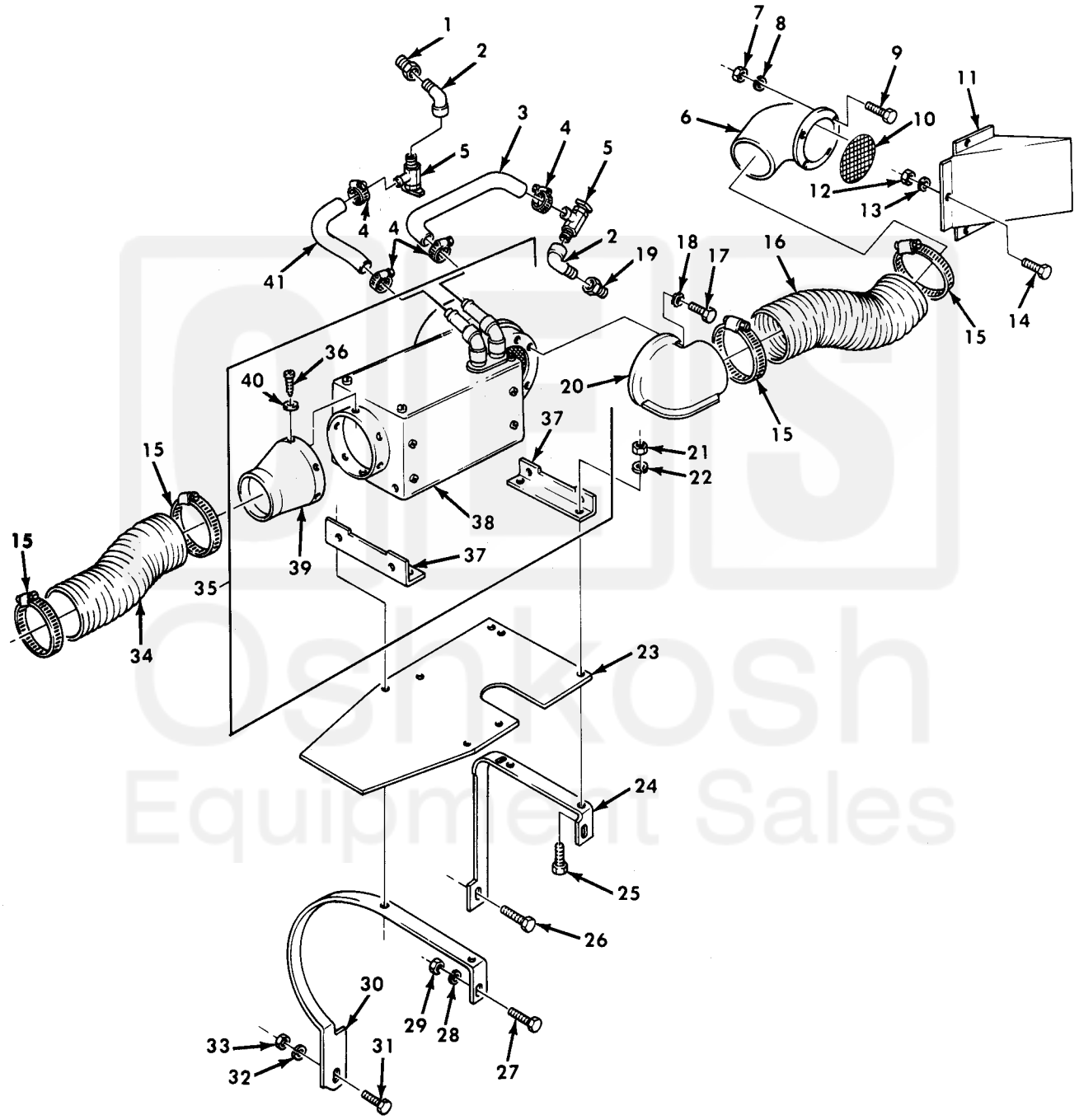

Figure 471. Hot Water Personnel Heater Kit, Heater Assembly and Related Parts.

Current part is item (38) on diagram. Available at www.oshkoshequipment.com

Current part is item (38) on diagram. Available at www.oshkoshequipment.com

(1) ITEM NO	(2) SMR CODE	(3) NSN	(4) CAGEC	(5) PART NUMBER	(6) DESCRIPTION AND USABLE ON CODE (UOC)	(7) QTY
					GROUP 3303 WINTERIZATION KITS	
					FIG. 471 HOT WATER PERSONNEL HEATER KIT,HEATER ASSEMBLY AND RELATED PARTS	
1	PAOZZ	4730-00-817-6578	30379	120322	BUSHING,PIPE PART OF KIT P/N 11648557.....	1
2	PAOZZ	4730-00-253-4413	96906	MS39230-3	ELBOW,PIPE PART OF KIT P/N 11648557	2
3	MOOZZ		19207	8710557	HOSE,NONMETALLIC MAKE FROM HOSE,P/N MS521301A203R.....	1
4	PFOZZ	4730-00-826-4268	19207	11608950-4	CLAMP,HOSE PART OF KIT P/N 11648557	4
5	PAOZZ	4820-01-035-7882	21450	596800	COCK,DRAIN PART OF KIT P/N 11648557	2
6	PAOZZ	2540-00-177-8108	19207	7951057	ADAPTER,VEHICLE STO PART OF KIT P/N 11648557.....	1
7	PAOZZ	5310-00-934-9751	96906	MS35650-302	NUT,PLAIN,HEXAGON PART OF KIT P/N 11648557.....	4
8	PAOZZ	5310-00-080-9786	96906	MS45904-60	WASHER,LOCK PART OF KIT P/N 11648557.....	4
9	PAOZZ	5305-00-993-1848	96906	MS35207-265	SCREW,MACHINE PART OF KIT P/N 11648557.....	4
10	PAOZZ	4730-00-567-1630	19207	7390375	STRAINER ELEMENT,SE PART OF KIT P/N 11648557.....	1
11	PAOZZ	2540-00-021-2397	19207	7951428	HOOD, HEATER INTAKE PART OF KIT P/N 11648557.....	1
12	PAOZZ	5310-00-761-6882	96906	MS51967-2	NUT,PLAIN,HEXAGON PART OF KIT P/N 11648557.....	3
13	PAOZZ	5310-00-550-1130	96906	MS35333-40	WASHER,LOCK PART OF KIT P/N 11648557.....	3
14	PAOZZ	5305-00-068-0501	96906	MS90725-5	SCREW,CAP,HEXAGON H PART OF KIT P/N 11648557.....	3
15	PAOZZ	4730-01-067-4711	19207	11608950-16	CLAMP,HOSE PART OF KIT P/N 11648557	4
16	PAOZZ	4720-00-809-2430	19207	11669141	HOSE,NONMETALLIC PART OF KIT P/N 11648557.....	1
17	PAOZZ	5305-00-068-0500	96906	MS90725-3	SCREW,CAP,HEXAGON H PART OF KIT P/N 11648557.....	4
18	PAOZZ	5310-00-889-2528	96906	MS45904-68	WASHER,LOCK PART OF KIT P/N 11648557.....	4
19	PAOZZ	4730-00-186-3028	81348	WW-P-471-BDQBCEC	BUSHING,PIPE PART OF KIT P/N 11648557.....	1
20	PAOZZ	4520-01-201-7763	19207	11648525	ELBOW,AIR-CONDITION PART OF KIT P/N 11648557.....	1
21	PAOZZ	5310-00-880-7746	96906	MS51968-5	NUT,PLAIN,HEXAGON PART OF KIT P/N 11648557.....	4
22	PAOZZ	5310-00-167-0721	96906	MS35333-41	WASHER,LOCK PART OF KIT P/N 11648557.....	8
23	KFOZZ		19207	11648512	PLATE PART OF KIT P/N 11648557.....	1
24	PFOZZ	5340-01-114-7706	19207	11648509	BRACKET,DOUBLE ANGL PART OF KIT P/N 11648557.....	1
25	PAOZZ	5306-00-225-9089	96906	MS90726-34	BOLT,MACHINE PART OF KIT P/N 11648557.....	4
26	PAOZZ	5305-00-269-3239	80204	B1821BH038F138N	SCREW,CAP,HEXAGON H PART OF KIT P/N 11648557.....	1
27	PAOZZ	5305-00-269-2803	96906	MS90726-60	SCREW,CAP,HEXAGON H PART OF KIT P/N 11648557.....	2
28	PAOZZ	5310-00-080-6004	96906	MS27183-14	WASHER,FLAT PART OF KIT P/N 11648557.....	4

Current part is item (38) on diagram. Available at www.oshkoshequipment.com

Current part is item (38) on diagram. Available at www.oshkoshequipment.com

(1) ITEM NO	(2) SMR CODE	(3) NSN	(4) CAGEC	(5) PART NUMBER	(6) DESCRIPTION AND USABLE ON CODE (UOC)	(7) QTY
29	PAOZZ	5310-00-061-7325	96906	MS21045-4	NUT,SLFLKG HEXAGON PART OF KIT P/N 11648557.....	2
30	KFOZZ		19207	11648511	BRACKET PART OF KIT P/N 11648557...	1
31	PAOZZ	5305-00-725-0154	96906	MS90727-112	SCREW,CAP,HEXAGON H PART OF KIT P/N 11648557.....	1
32	PAOZZ	5310-00-809-5998	96906	MS27183-18	WASHER,FLAT PART OF KIT P/N 11648557.....	1
33	PAOZZ	5310-00-062-4954	96906	MS21045-8	NUT,SELF-LOCKING,HE PART OF KIT P/N 11648557.....	1
34	PAOZZ	4720-00-163-8422	19207	11677625-1	HOSE,AIR DUCT PART OF KIT P/N 11648557.....	1
35	KFOOO		19207	11648638	HEATER,VEHICULAR,CO PART OF KIT P/N 11648557.....	1
36	PAOZZ	5305-00-058-1082	96906	MS51861-34	.SCREW,TAPPING.....	4
37	PAOZZ	5340-01-239-3574	19207	11648754	.BRACKET,ANGLE.....	2
38	PAOZZ	2540-00-020-8591	96906	MS51326-1	.HEATER,VEHICULAR,CO.....	1
39	PAOZZ	4520-00-752-4078	19207	7524078	.ADAPTER ASSEMBLY,CO.....	1
40	PAOZZ	5310-00-061-0004	96906	MS45904-57	.WASHER,LOCK.....	4
41	MDOZZ		19207	8710557-16	HOSE,NONMETALLIC MAKE FROM HOSE, P/N MS521301A203R PART OF KIT P/N 11648557.....	1

END OF FIGURE

Current part is item (38) on diagram. Available at www.oshkoshequipment.com